WP 6mm PRO MINI

Connecting window profile 6mm PROmini

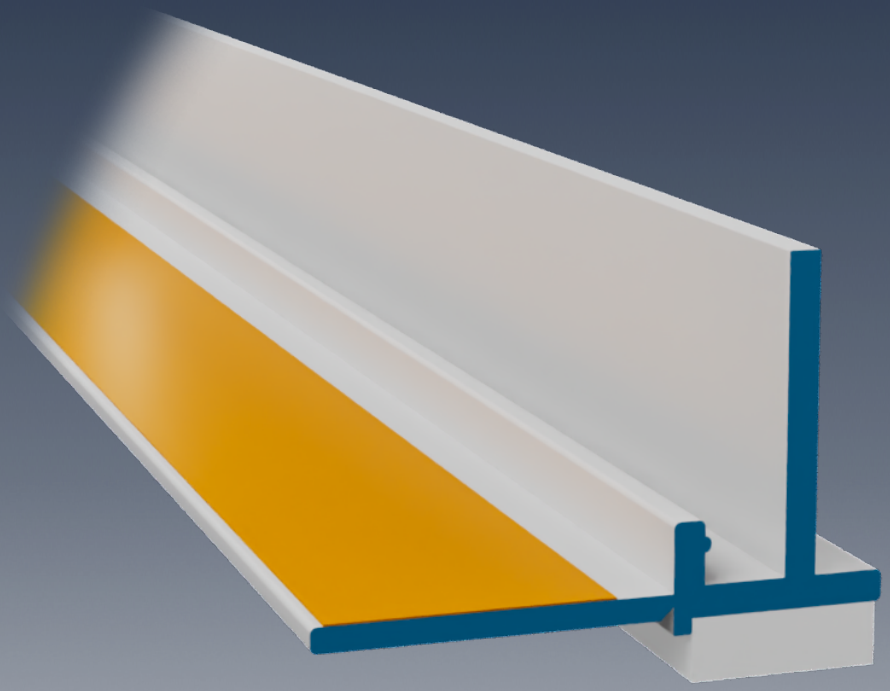

NiP Spasic

Connecting window profile 6mm PROmini

Length 1,4m / 1,6m / 2,4m **Colors**

This profile is designed to create a flexible seal between window/door frames and the plaster/render system. It prevents the formation of cracks caused by movement between the frame and the wall. It features a self-adhesive strip for attaching protective foil during the plastering process.

- Rigid PVC
- Tear-off Strip with Double sided adhesive tape
- PE foam tape Rainproof and UV-resistant tape

Bend

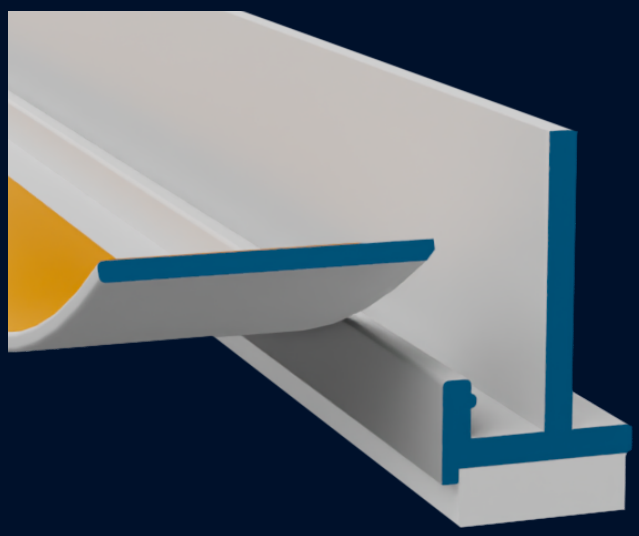

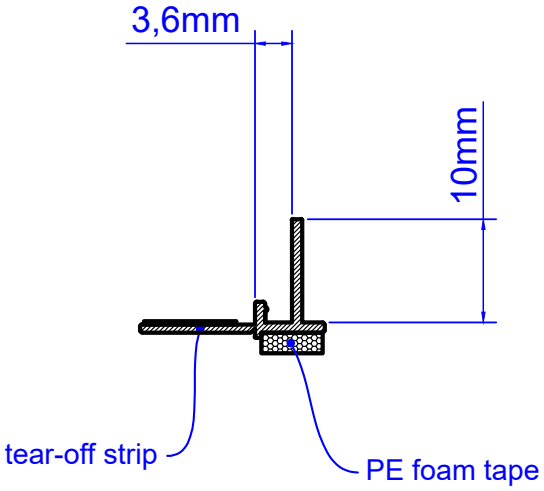

Technical drawing

WINDOW PROFILES

NiP Spasic

1 Prepare the Frame

Ensure the window or door frame is completely clean, dry, and free of grease, dust, or moisture. This is critical for the strong adhesion of the PE foam tape.

2 Measure and Cut

Measure the height and width of the window opening. Cut the profile to the exact required dimensions using mitre shears or a fine saw.

3 Install Profile

Remove the protective liner from the PE foam tape on the back of the profile. Press the profile firmly onto the window frame, ensuring it is straight and aligned with the insulation or wall edge.

4 Attach Protection

Remove the liner from the secondary adhesive strip located on the removable tear-off strip. Attach protective foil to this strip to cover and protect the window glass and frame during plastering.

5 Apply Plaster and Finish

Apply the plaster or render system, using the profile edge as a guide. Once the plaster has dried/cured, carefully pull the protective sheeting to snap off the removable strip, leaving a clean, sharp edge.

We invite you to reach out to our team to discuss our custom packaging solutions.

Packaging	
50pcs	30pcs